Hybrid Signcryption with Insider Security

Alexander W. Dent

ROYAL HOLLOWAY, UNIVERSITY OF LONDON
Information Security Group

Signcryption

- Introduced by Zheng 1997.
- Combines advantages of PKE and signatures:
  - Confidentiality
  - Integrity/Origin authentication
  - Non-repudiation?
- A relatively new type of primitive.
- We haven't even agreed a security model yet.

Signcryption

- A common parameter generation algorithm.
- A receiver key-pair (pk_R,sk_R) generation algorithm.
- A sender key-pair (pk_S,sk_S) generation algorithm.
- A generation-encryption algorithm.
- A verification-decryption algorithm.

ROYAL HOLLOWAY, UNIVERSITY OF LONDON
Information Security Group

Signcryption

- An, Dodis and Rabin (2002) security model.
- This is a two user model.
- Outsider security
  - Security against all third parties, i.e. anyone who isn't the sender or receiver.
- Insider security
  - Full security, including integrity protection against attacks made by the receiver.
- Baek, Steinfeld and Zheng (2002) model.

Signcryption: confidentiality

- No third party can distinguish between a signcryption of one message and a signcryption of another message.
- Normal IND criteria, except that we must provide the attacker with encryption and decryption oracles.
- We do not consider forward security (with can be expressed using the Baek *et al.* model).

Signcryption: integrity

- Attacker in possession of the receiver's private key must attempt to forge a signcryption from the sender.
- Normal existential unforgeability game.
- Attacker has access to an encryption oracle for the sender.

Signcryption: non-repudiation

- The ability for a third party to check that a given signcryption is a proper signcryption of a given message.
- Not required for most applications.
- Most signcryption schemes “cheat” and use NIZK proofs.
- A trend that we will continue.
- See Malone-Lee (2004).

Hybrid encryption

- Involves the use of black-box symmetric algorithms with certain security properties.
- Very popular trick:
  - ECIES/DHAES
  - Fujisaki-Okamoto and related transforms.
- Most use the same “trick” of encrypting a random symmetric key with the asymmetric algorithm.
- Formalised by Cramer and Shoup (2004).

Hybrid encryption

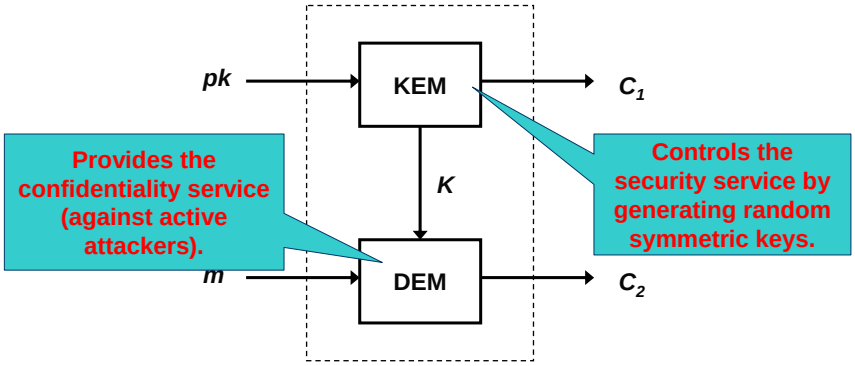

Hybrid signcryption

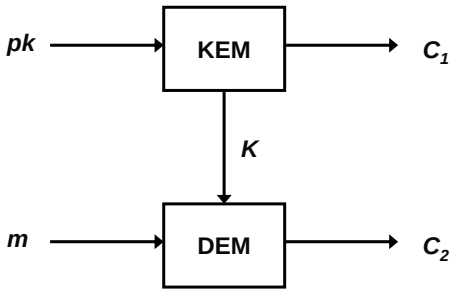

Hybrid signcryption

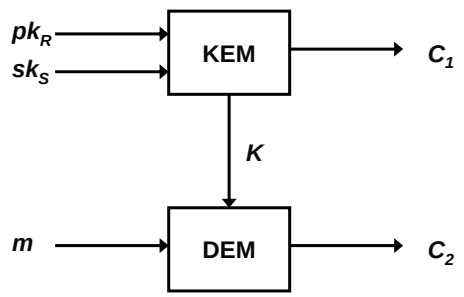

Hybrid signcryption

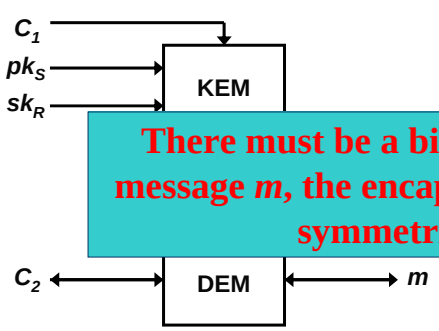

- The attacker finds a valid signcryption
- Computes $C_2'=\mathrm{DEM}_K(m')$.
- (C_1,C_2) is a forgery.

There must be a binding between the message *m*, the encapsulation C_1 and the symmetric key *K*.

Hybrid signcryption

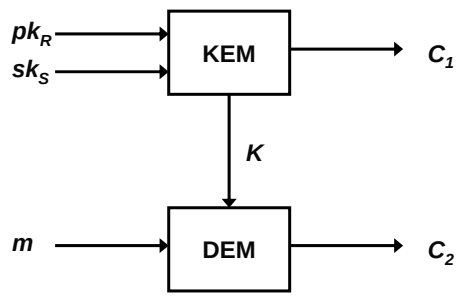

Hybrid signcryption

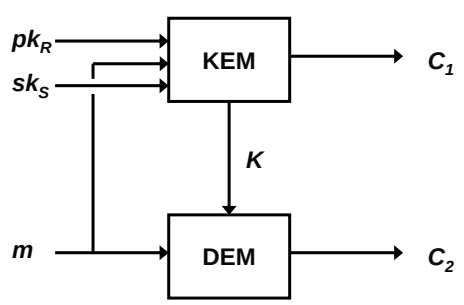

Hybrid signcryption

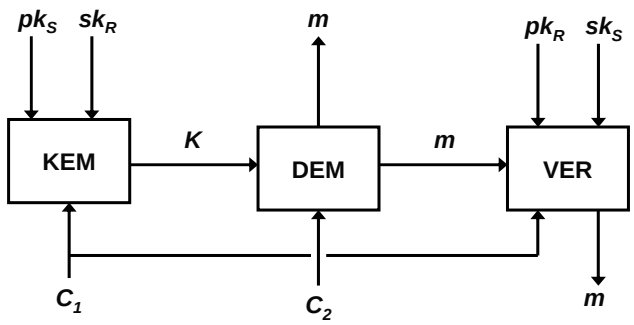

Hybrid signcryption

- Note that the KEM necessarily provides a signature on the message, where
  - The signing algorithm is given by KEM.
  - The verification algorithm is given by VER.
- Therefore, the KEM provides the integrity service...
- ...and the DEM only has to provide a confidentiality service.
- Arguably closer to Fujisaki-Okamoto than Cramer-Shoup.

Hybrid signcryption: confidentiality

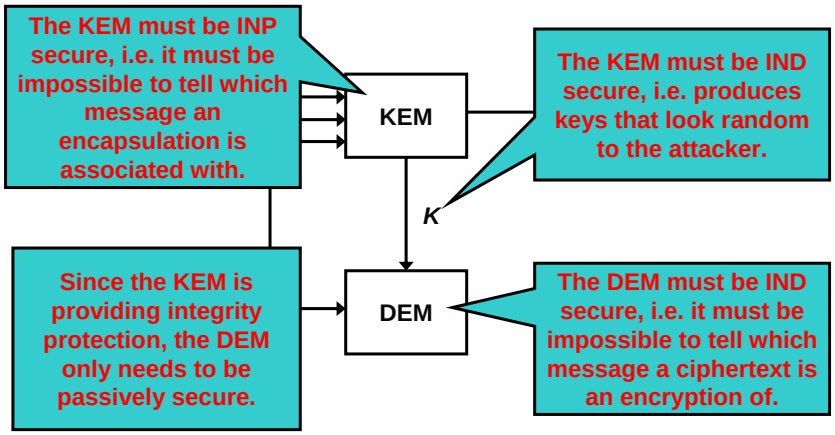

Hybrid signcryption: integrity

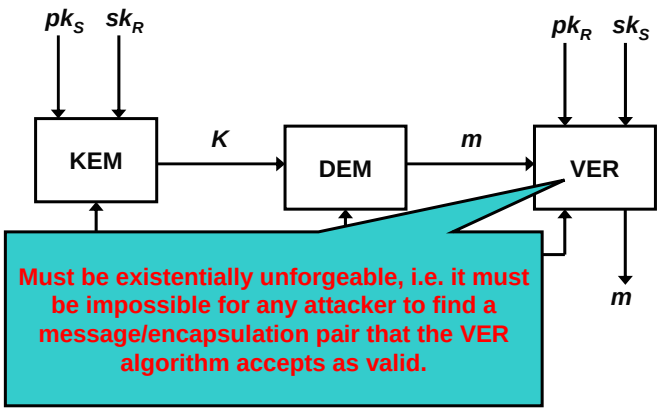

Hybrid signcryption

- Need to present a scheme to demonstrate practicality of this construction paradigm.
- Many schemes already exist in the literature.
- In particular, the Baek *et al.* variant of Zheng's original signcryption scheme is provably secure as a hybrid signcryption scheme.
- Note that efficiency can be gained by re-using in the VER variables calculated in the KEM.

Open problems

- Can we use this framework to prove the security of previously unproven schemes?
- Can we use this framework to develop new schemes?
- Schemes with better non-repudiation properties?

Open problems

- No satisfactory model for multi-user security.
- Multi-user model should allow the attacker to initiate users, replace public keys, corrupt users, make test queries, force users to encrypt messages, force users to decrypt signcryptions.
- Similar to Certificateless PKE security model.
- Should be easy for outsider security!

Open problems

- Tag-KEM construction for PKE introduced by Abe, Gennaro and Kurosawa (2005).

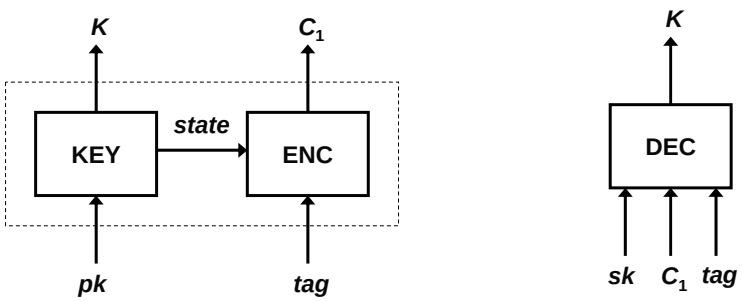

Open problems

- Implicit link between the message (in the form of the DEM encryption C_2) and the symmetric key used to encrypt it!
- Great potential for more efficient insider secure hybrid signcryption schemes.

ROYAL HOLLOWAY, UNIVERSITY OF LONDON
Information Security Group

Conclusions

- Signcryption schemes can be built using a hybrid approach, separating the scheme into independent building blocks.
- Most known schemes have implicitly used this construction.
- However, more work can be done in this particularly under-researched area.